PortaCom Wired Intercom Owners Manual

MADE IN USA

ANCHOR®

TWO YEAR WARRANTY

A Message from the President

Congratulations on purchasing an Anchor Audio intercom system, the choice of thousands of satisfied customers including the White House, prestigious universities, school districts nationwide, police and fire departments, and all branches of the U.S. Military. Our products are made of the finest materials and built with pride in the U.S.

We've incorporated the latest technology into your intercom system yet kept it simple to use. Just take a few minutes to review this manual to ensure the maximum enjoyment of your Anchor system. Or, you can view a demonstration video complete with a trouble shooting section at www.anchoraudio.com.

Feel free to call our friendly customer support staff at 1-800-ANCHOR1 with any questions. We love to hear from our customers.

on behalf of all Anchor employees

GETTING STARTED

Please check your new unit carefully for any damage which may have occurred during shipment. Each Anchor product is carefully inspected at the factory and packed in specially designed boxes for safe transport.

Notify the freight carrier immediately of any damage to the shipping box or product. Repack the unit in the original box and wait for inspection by the carrier's claim agent. Notify your dealer of the pending freight claim.

NOTE: All damage claims must be made with freight carrier!

RETURNING SYSTEMS FOR SERVICE OR REPAIR

For service or repair, please contact the dealer you purchased your system from, call us at 1-800-262-4671, or visit www.AnchorAudio.com, Contact Us page. Our tech support team will issue an RA number for warranted systems, after which, you can ship the item(s) to Anchor for repair. All shipments to Anchor Audio must include an RA number and must be shipped prepaid. C.O.D. shipments and shipments without an RA number will be refused and returned at your expense.

IMPORTANT: Save the shipping box & packing materials, they were specially designed to ship your unit!

CONTENTS

GETTING STARTED 1

BASIC SYSTEM OPERATION / WHAT IS PORTACOM? 2

PC-2000 POWER CONSOLE / BP-2000 BELTPACKS / H-2000 AND H-2000S HEADSETS 3

IMPORTANT SAFETY INFORMATION 4

TECHNICAL SPECS / ANCHOR WARRANTY 5

MADE IN USA

ANCHOR®

TWO YEAR WARRANTY

BASIC SYSTEM OPERATION

1. Plug headset connector into 4-pin XLR Headset Jack on beltpack
2. Plug AC adapter into standard 110V AC outlet *(230V AC export)* then into AC Input Jack on the PC-2000 Power Console
3. Connect BP-2000 Beltpacks to the Output Jacks on the PC-2000

NOTE: Make connections w/ standard mic cables.

4. Set the PC-2000 Power Switch to "on"
5. Adjust headset boom so microphone is close to mouth
6. Adjust listening level w/ Headset Volume Control on Beltpack
7. Use Channel Switch to select between channel A or B

NOTE: The optional RM-100 rackmount allows 1 or 2 PC-2000's to mount in standard racks.

WHAT IS PORTACOM?

PortaCom Intercom System is a portable two-channel communication device that's simple to set up and easy to use. The main system components include:

PC-2000 Power Console, BP-2000 Beltpacks & H-2000 & H-2000S Headsets

Station-to-station connections are made using standard microphone cable with 3-pin XLR connectors.

The PC-2000 Power Console has four output jacks to make a 4-headset system. You can add more headsets/users to the system by using the B3-2000 Branch Box to expand and reconfigure your system for use in almost any situation.

A typical 6-headset system using one B3-2000 is illustrated here:

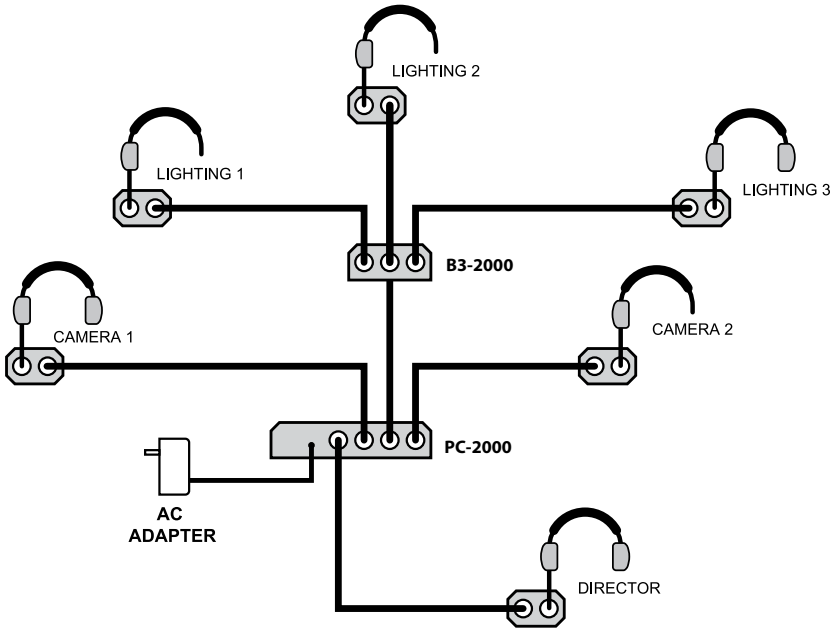

MADE IN USA

ANCHOR®

TWO YEAR WARRANTY

PC-2000 POWER CONSOLE

The PC-2000 Power Console can power up to 20 BP-2000 Beltpacks over a combined total of 2,500 feet of cable. It has a power switch, an input for connecting the AC adapter, and four 3-pin XLR output jacks.
Using the RM-100 bracket you can mount one or two PC-2000s in a standard rack.
Beltpacks are connected to the PC-2000 using standard mic cable with 3-pin XLR connectors.

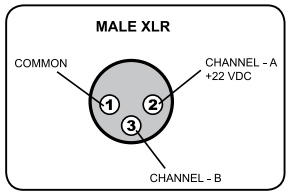

BP-2000 BELTPACK

The BP-2000 Beltpack has a female 3-pin XLR Line Input Jack and a male 4-pin XLR Headset Jack. Both jacks are located on the bottom side of the beltpack. Power is supplied through the microphone cable by the PC-2000 Power Console.
The BP-2000 controls can be found on the beltpack top and feature:

Headset Volume Control, A/B Channel Switch,
Mic Mute Button & Call Light & Button

The Headset Volume Control adjusts only the individual headset listening level, not the volume level of the entire system.
Setting the Mic Mute Button to "on" enables the headset microphone. Setting the button to "off" will short or mute the microphone. The Mic Mute Button does not affect the headset listening volume.
Pushing the Call Button will light the Call Light on all beltpacks connected to the system. Use the Call Light to alert any users who may not be wearing their headsets.

H-2000 & H-2000S PORTACOM HEADSETS

PortaCom comes with single-earpiece *(H-2000S)* and/or dual-earpiece *(H-2000)* headsets. To use, plug the headset cable into the bottom of the BP-2000 Beltpack. Adjust the headset listening level using the Headset Volume Control on the beltpack.

The headset's female 4-pin XLR connector plugs into the 4-pin XLR jack on the bottom of the beltpack. A wiring diagram of the headset connector is shown at right.

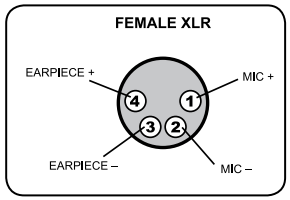

PC-2000 POWER CONSOLE - CONTROL PANEL

NEED MORE HELP? View demonstration videos on proper system setup and operation at our website: www.anchoraudio.com

NOTE: Custom length microphone cables are available from Anchor Audio.

BP-2000 BELTPACK - TOP/BOTTOM

MADE IN USA

ANCHOR®

TWO YEAR WARRANTY

Important Safety Instructions

1) Read Instructions – All the safety and operation instructions should be read before the product is operated.
2) Retain Instructions – The safety and operating instructions should be retained for future reference.
3) Heed Warnings- All warnings on the product and in the operating instructions should be adhered to.
4) Follow Instructions – All operating and use instructions should be followed.
5) Cleaning – Unplug this product from the wall outlet before cleaning. Do not use liquid cleaners or aerosol cleaners. Use a damp cloth for cleaning.
   Exception: A product that is meant for uninterrupted service and that for some specific reason, such as the possibility of the loss of an authorization code for the CATV converter, is not intended to be unplugged by the user for cleaning or any other purpose, may exclude the reference to unplugging the product in the cleaning description otherwise in above 5).
6) Attachments – Do not use attachments not recommended by the product manufacturer as they may cause hazards.
7) Water and Moisture – Do not use this product near water – for example, near a bath tub, wash bowl, kitchen sink, or laundry tub; in a wet basement; or near a swimming pool; and the like.
8) Accessories – Do not place this product on an unstable cart, stand, tripod, bracket, or table. The product may fall, causing serious injury to a child or adult, and serious damage to the product. Use only with a cart, stand, tripod, bracket, or table recommended by the manufacturer, or sold with the product. Any mounting of the product should follow the manufacturer's instructions, and should use a mounting accessory recommended by the manufacturer.
9) A product and cart combination should be moved with care. Quick stop, excessive force, and uneven surfaces may cause the product and cart combination to overturn.
10) Ventilation – Slots and openings in the cabinet are provided for ventilation and to ensure reliable operation of the product and to protect it from overheating, and these openings must not be blocked or covered. The openings should never be blocked by placing the product on a bed, sofa, rug, or other similar surface. This product should not be placed in a build-in installation such as a bookcase or rack unless proper ventilation is provided or the manufacturer's instructions have been adhered to.
11) Power Sources – This product should be operated only from the type of power source indicated on the marking label. If you are not sure of the type of power supply to your home, consult your product dealer or local power company. For products intended to operate from battery power, or other sources, refer to the operating instructions.
12) Grounding or Polarization – This product may be equipped with a polarized alternating-current line plug (a plug having one blade wider than the other). This plug will fit into the power outlet only one way. This is a safety feature. IF you are unable to insert the plug fully into the outlet, try reversing the plug. If the plug should still fail to fit, contact your electrician to replace your obsolete outlet. Do not defeat the safety purpose of the polarized plug.
13) Power-Cord Protection – Power-supply cords should be routed so that they are not likely to be walked on or pinched by items placed upon or against them, paying particular attention to cords at plugs, convenience receptacles, and the point where they exit from the product.
14) Protective Attachment Plug – The product is equipped with an attachment plug having overload protection. This is a safety feature. See Instruction Manual for replacement or resetting of protective device. If replacement of the plug is required, be sure the service technician has used a replacement plug specified by the manufacturer that has the same overload protection as the original plug.
15) Outdoor Antenna Grounding – If an outside antenna or cable system is connected to the product, be sure the antenna or cable system is grounded so as to provide some protection against voltage surges and built-up static charges. Article 810 of the National Electrical Code, ANSI/NFPA 70, provides information with regard to proper grounding of the mast and supporting structure grounding of the lead in wire to an antenna discharge unit, size of grounding conductors, location of antenna-discharge unit, connection of grounding electrodes, and requirements for the grounding electrode. See Figure A.
16) Lightning – For added protection this product during lightning storm, or when it is left unattended and unused for long periods of time, unplug it from the wall outlet and disconnect the antenna or cable system. This will prevent damage to the product due to lightning and power-line surges.
17) Power Lines – An outside antenna system should not be located in the vicinity of overhead power lines or other electric light or power circuits, or where it can fall into such power lines or circuits. When installing an outside antenna system, extreme care should be taken to keep from touching such power lines or circuits as contact with them might be fatal.
18) Overloading – Do not overload wall outlets, extension cords, or integral convenience receptacles as this can result in a risk of fire or electric shock.
19) Object and Liquid Entry – Never push objects of any kind into this product through openings as they may touch dangerous voltage points or short-out parts that could result in a fire or electric shock. Never spill liquid of any kind on the product.
20) Servicing – Do not attempt to service this product yourself as opening or removing covers may expose you to dangerous voltage or other hazards. Refer all servicing to qualified service personnel.
21) Damage Requiring Service – Unplug this product from the wall outlet and refer servicing to qualified service personnel under the following conditions:
    a. When the power-supply cord or plug is damaged.
    b. If liquid has been spilled, or objects have fallen into the product.
    c. If the product has been exposed to rain or water.
    d. If the product does not operate normally by following the operating instructions. Adjust only those controls that are covered by the operating instructions as an improper adjustment of other controls may result in damage and will often require extensive work by a qualified technician to restore the product to its normal operation.
    e. If the product has been dropped or damaged in any way.
    f. When the product exhibits a distinct change in performance – this indicates a need for service.
22) Replacement Parts – When replacement parts are required, be sure the service technician has used replacement parts specified by the manufacturer or have the same characteristics as the original part. Unauthorized substitutions may result in fire, electric shock, or other hazards.
23) Safety Check – Upon completion of any service or repairs to this product, ask the service technician to perform safety checks to determine that the product is in proper operation condition.
24) Wall or Ceiling Mounting – The product should be mounted to a wall or ceiling only as recommended by the manufacturer.
25 Heat – The product should be situated away from heat sources such as radiators, heat registers, stoves, or other products (including amplifiers) that produce heat.

MADE IN USA

ANCHOR®

TWO YEAR WARRANTY

PORTACOM TECHNICAL SPECIFICATIONS

Operating Distance	Up to 2,500 ft *(total cable length)*
Normal Line Level	-15dBV
Signal-to-Noise Ratio	-65dB
Distortion	< 0.5%
Connecting Cables	Standard 1-pair shielded mic cable w/ 3-pin XLR *(heavy-duty cable recommended for runs over 250 ft)*
Compatibility	Generally compatible w/ industry standard system *(call for info)*
B3-2000 – Branch Box	
Connectors *(3-pin XLR)*	Input – 1 female / Output – 3 male
Dimensions	1.9" x 4.1" x 4.25" (48 x 105 x 108 mm)
Weight	19.2 oz / 0.5 kg
BP-2000 – Beltpack	
Input Line Connector	3-pin XLR – female
Headset Connector	4-pin XLR – male
Bridging Impedance	10k ohm min
DC Current Reqs.	20mA max
Dimensions	3.8" x 2.75" x 1.25" (96.5 x 69.85 x 31.75 mm)
Weight	.40 oz. / 0.0113 kg.
H-2000/H-2000S–Dual-Earpiece/Single-Earpiece Headset	
Connector	4-pin XLR – female
Microphone Type	Dynamic, low impedance
Dimensions	3.5" x 7.4" x 7.9" (8.9 x 18.8 x 20 cm)
Weight	H-200 16 oz / .45 kg H-200S 13 oz / .37 kg
PC-2000 – Two-Channel Power Console	
Output Connectors	3-pin XLR – 4 male
Voltage Output	22 volts DC to belt packs
Max. Current Capacity	400mA
Max. Belt Packs	20 BP-2000 belt packs
Input Power Reqs.	24VAC, 50/60Hz, 750mA; 30 – 40VDC, 500mA
Dimensions	1.75" x 8.5" x 4.5" (45 x 216 x 114 mm)
Weight	57.6 oz / 1.63 kg
AC Power Adapter	Anchor model AC-20
Input Voltage	120VAC, 60Hz
Output Voltage/Current	24VAC @ 750mA

Anchor Audio Warranty

Anchor Audio only warranties products sold by authorized Anchor Audio dealers. Anchor Audio is unable to repair products that are out of warranty. Please visit the Anchor FAQ page at http://www.anchoraudio.com/anchor-faq.html for more information on battery replacement options.

To locate an authorized dealer near you, please contact sales@anchoraudio.com.

Anchor Audio products are warranted to be free from defects in materials and workmanship for the period of SIX (6) YEARS from the date of original purchase unless listed below:

1. All microphone and beltpack transmitters shall be warranted for a TWO (2) YEAR period.
2. Batteries shall be warranted for a TWO (2) YEAR period.
3. PortaCom and ProLink 500 headsets and beltpacks shall be warranted for a TWO (2) YEAR period.
4. All woodworking shall be warranted for a TWO (2) YEAR period.
5. CounciIMAN and Assistive Listening Systems shall be warranted for a TWO (2) YEAR period.
6. All cases and covers shall be warranted for a TWO (2) YEAR period.

ANCHOR AUDIO CUSTOMER SERVICE

800.262.4671

FOR ADDITIONAL INFORMATION
visit www.anchoraudio.com